AUTOMATIC SPEED CONTROL for ELEV. TRIM MOTORS with AIRSPEED INPUT

STAGE #1

LOWER DRIVE VOLTAGE for ELEV. TRIM

OPTION #1

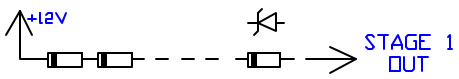

Use a series combination of 2.7V zener diodes (1N5323) to lower the motor drive voltage. This is method is only recommended motor currents up to 180mA max. For example, 2 zeners lowers 12V to a 6.6V source.

OPTION #2

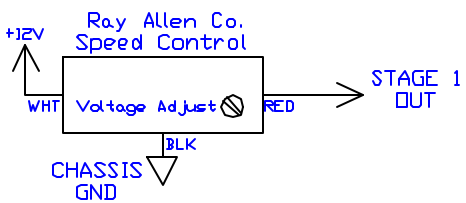

Use the Ray Allen Co. or an equivalent speed control. Most good voltage regulators have a screwdriver adjustable voltage output.

STAGE #2

MOTOR DRIVE VOLTAGE CHANGE with AIRSPEED

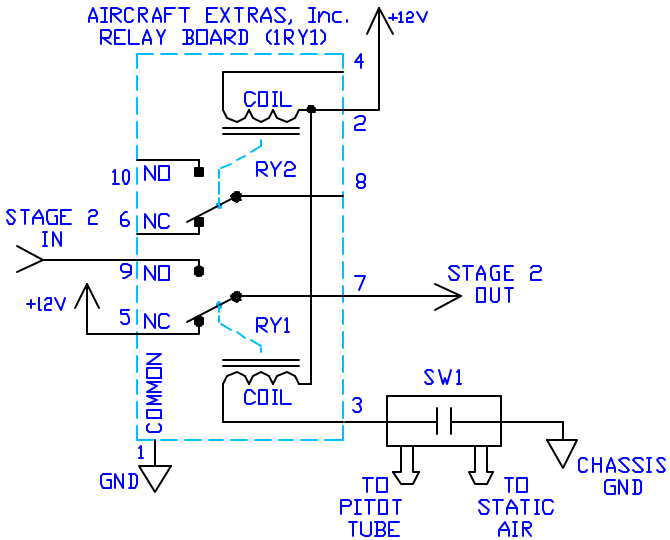

SW1 is an adjustable indicated airspeed switch. Its setpoint is screwdriver adjustable. The switch is closed above its airspeed setpoint. The output voltage of this stage is 12V when SW1 is open. When SW1 is closed, the output voltage of this stage is equal to the input voltage of this stage.

STAGE #3

INTERFACE with ELEV. TRIM SWITCHES

OPTION #1

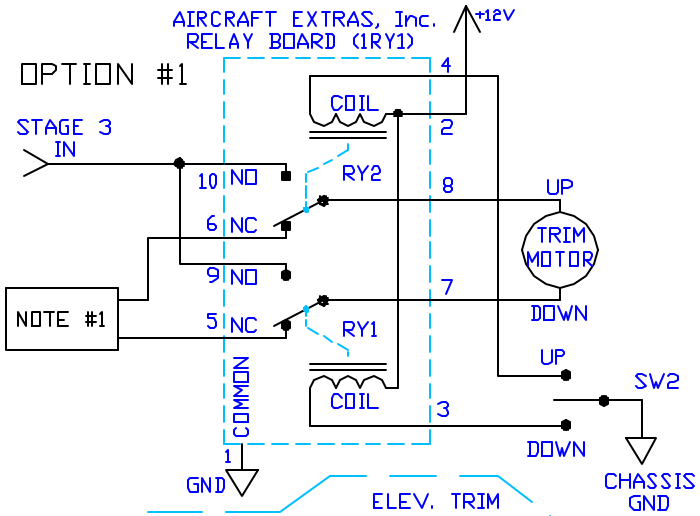

OPTION #2

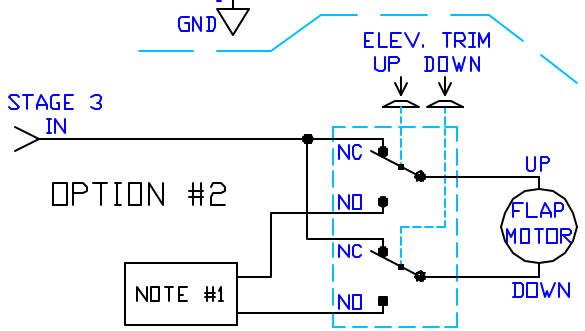

Use option #1 of this stage if you use a Single Pole, Double Throw, (ON)-OFF-(ON), momentary, 3 position switch for your elevator trim control. Use option #2 if your elevator trim control switches can be wired as two independently actuated switches.

NOTE #1:
More than one switch, relay, or controller can be connected together to control the elevator trim motor. If this is the case, the inputs of these devices can be wired here. Otherwise, connect these wires to battery common or chassis.

AIRSPEED RELAY CONNECTION DIAGRAM
Rev. C, 2/23/06
AIRCRAFT EXTRAS, INC.
www.aircraftextras.com

NOTE: Relay board 1RY1 arc protection diodes not shown for diagram simplicity.