SCHEMATIC (FPS-Plus for +12V Systems)
(for NON-CLUTCH DRIVEN FLAP MOTORS)

NOTES:
1.) THICKER LINES DENOTE HIGHER CURRENT PATH FOR MOTORS & CHASSIS GROUND. SIZE WIRE FOR 10A MAX, #14AWG. ALL OTHER WIRES CAN BE #24AWG.
2.) THESE TWO SWITCHES OPERATE INDEPENDENTLY EVEN THOUGH THEY MAY BE IN ONE HOUSING. (Example: RayAllen's RS1 or their STICK GRIP switches) SWITCHES ARE [Single Pole, Double Throw, ON-NONE-(ON), Momentary] SEE OUR SWITCH DOCUMENTATION SHEET FOR SUBSTITUTING HAT SWITCHES, RELAYS, OR OTHER SWITCHES.

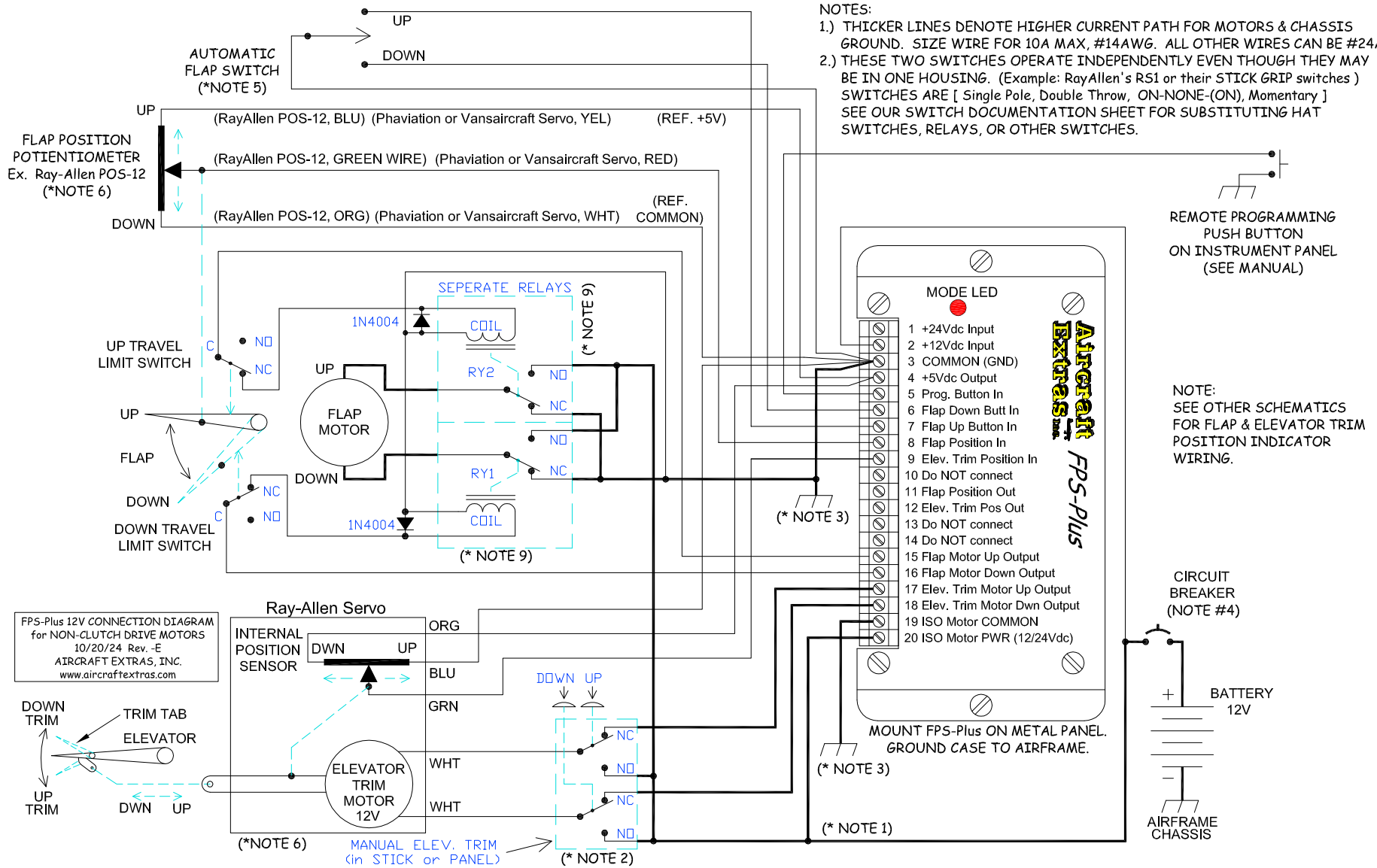

NOTES:
3.) USE SEPERATE LARGER WIRE TO CHASSIS. (#18AWG to #10AWG)
4.) WE RECOMMEND A PUSH-ON/PULL-OFF BREAKER. SIZE CIRCUIT BREAKER FOR MAX. MOTOR CURRENTS UP TO 10A.
5.) ANY SWITCH [Single Pole, Double Throw, (ON)-OFF-(ON), Momentary] WE DO NOT RECOMMEND MOUNTING THIS SW ON STICKS SINCE ACCIDENTALLY BUMPING THIS SWITCH ACTIVATES A SIGNIFICENT FLAP MOVEMENT.
6.) POTIENTIOMETERS CAN BE 5K, 10K, or 20K Ohms. (Ex. model: RayAllen's POS-12) (FOR ELEV. TRIM, YOU CAN USE THE INTERNAL POT THAT IS A PART OF RayAllen's SERVOS IF DESIRED.)
7.) FOR SWITCHES, (ON) MEANS "ON MOMENTARY" OR SPRING LOADED. ALL SWITCHES SHOWN DE-ENERGIZED.
8.) YOU MAY ADD A MANUAL SWITCH FOR FLAPS IF DESIRED. INSERT OUR RELAY BOARD INBETWEEN THE FPS-PLUS PINS 15 & 16 AND THE LIMIT SWITCHES. FOR MORE DETAIL, SEE OUR RELAY DIAGRAM.
9.) YOU CANNOT USE AIRCRAFT EXTRAS, INC RELAY BOARD 1RY1 BECAUSE THE PROTECTION DIODES ON OUR BOARD ARE REVERSED FROM WHAT YOU NEED FOR THIS CONNECTION. WE CAN MAKE YOU ONE THAT WILL WORK IF YOU ASK, OR YOU CAN JUST USE DISCRETE RELAYS FROM ANOTHER SOURCE.